Index

Page	Schematics Page Name
01	Cover Sheet / Revision History
02	LED DRIVER_MAIN_PAGE
03	SECONDARY_AND_REGULATION SECTION

01_Revision_History.SchDoc

Revision History

Rev.	Rel.	Date	Author	Description	Page(s)
2.0	RC01	2019-07-18	ABEY	update to V2 see Changelsit	3
2.1	RC02	2019-08-13	ABEY	add C42, C5 change Voltage to 50V	3
					3
					3

IC5102HV Reference Design

Default_Assembly

REF_ICL5102HV_150W_LCC

V2.1

Infineon Technologies AG
PMM ACDC AE RDE
Am Campeon 1-12 - 85579 Neubiberg - Germany

08/2019

LEGAL DISCLAIMER
THE INFORMATION GIVEN IN THIS DOCUMENT IS GIVEN FOR ILLUSTRATING PURPOSES ONLY. THE RECIPIENT OF THIS DOCUMENT MUST VERIFY ANY FUNCTION DESCRIBED HEREIN IN THE REAL APPLICATION. INFINEON TECHNOLOGIES HEREBY DISCLAIMS ANY AND ALL WARRANTIES AND LIABILITIES OF ANY KIND (INCLUDING WITHOUT LIMITATION WARRANTIES OF NON-INFRINGEMENT OF INTELLECTUAL PROPERTY RIGHTS OF ANY THIRD PARTY) WITH RESPECT TO ANY AND ALL INFORMATION GIVEN IN THIS DOCUMENT.

Infineon Technologies AG
PMM ACDC AE RDE
Am Campeon 1-12 - 85579 Neubiberg - Germany

Title	480VAC Professional Streetlight LCC LED Driver		
Variant	Default_Assembly	Approved	<Appr.>
Size: A3	Document Name: 01_Revision_History.SchDoc	Rel.: VA	Rev.: V2.1
Author: VA			
Date: 22.08.2019 Time: 14:18:13	SVN Revision: Not in version control		
© Infineon Technologies AG 2014. All Rights Reserved.	Sheet 1 of 3		

AC-DC_AND_REGULATION_SECTION.SchDoc

TEMPERATURE AND REGULATION SECTION

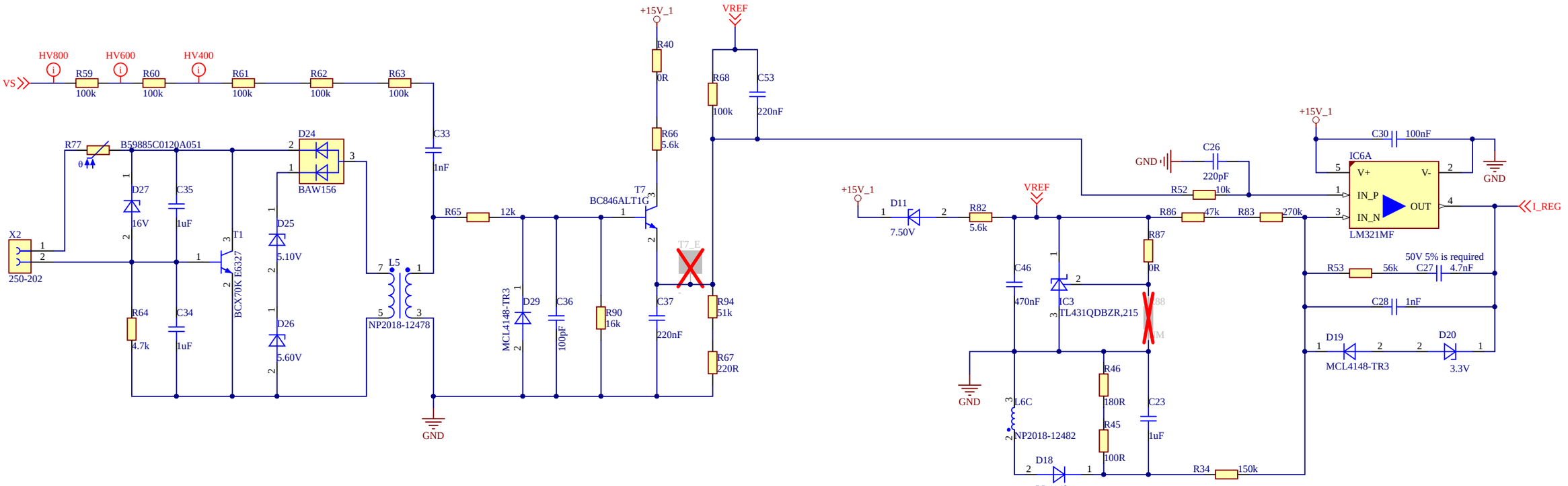

AC_DC RECTIFIER

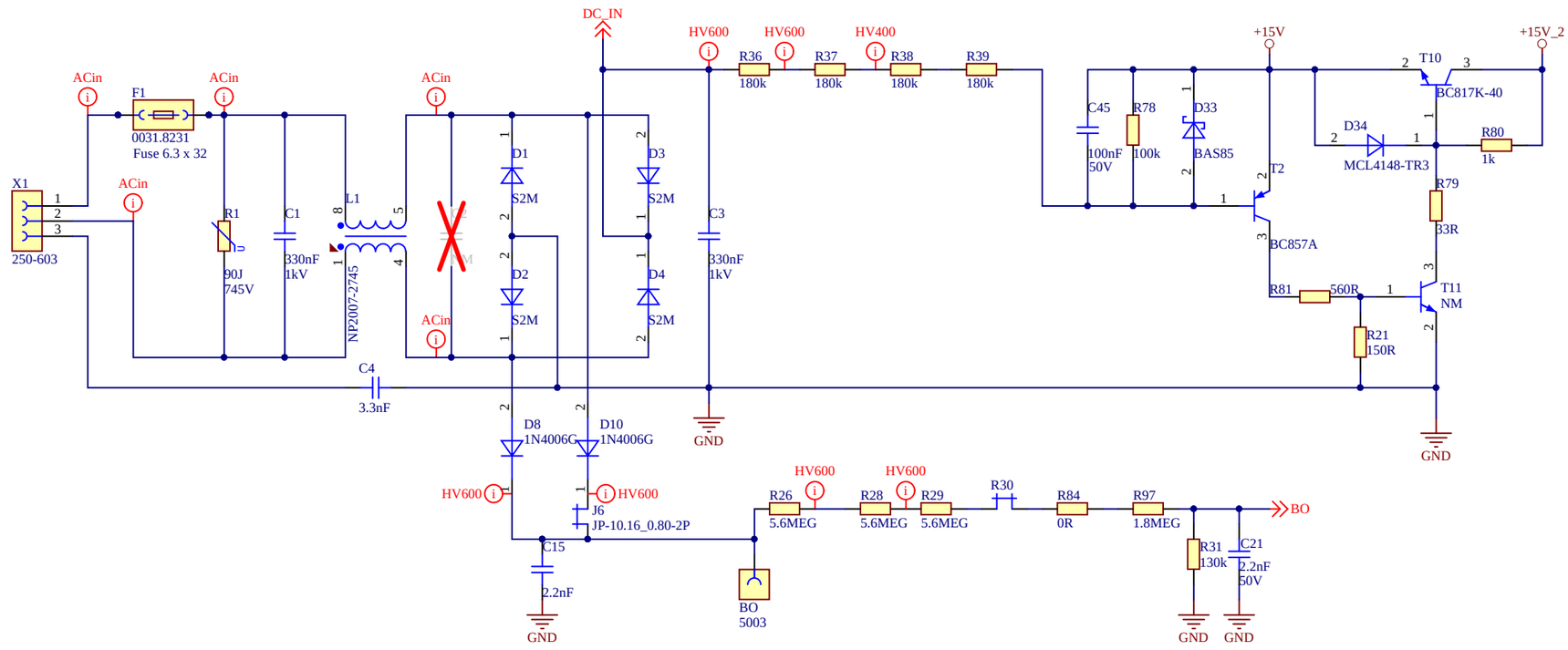

Jumpers

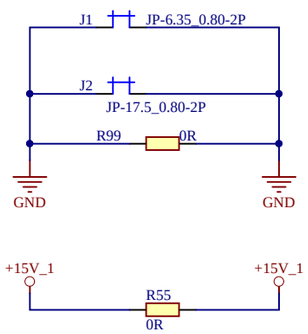

Infineon Technologies AG
PMM ACDC AE RDE
Am Campeon 1-12 - 85579 Neubiberg - Germany

Title	480VAC Professional Streetlight LCC LED Driver		
Variant	Default_Assembly	Approved	*
Size: A3	Document Name: AC-DC_AND_REGULATION_SECTION.SchDoc	Rel.: VA	Rev.: V2.1
Author: VA			
Date: 22.08.2019 Time: 14:18:14	SVN Revision: Not in version control		
© Infineon Technologies AG 2014. All Rights Reserved.	Sheet 2 of 3		

LED_DRIVER_MAIN_PAGE.SchDoc

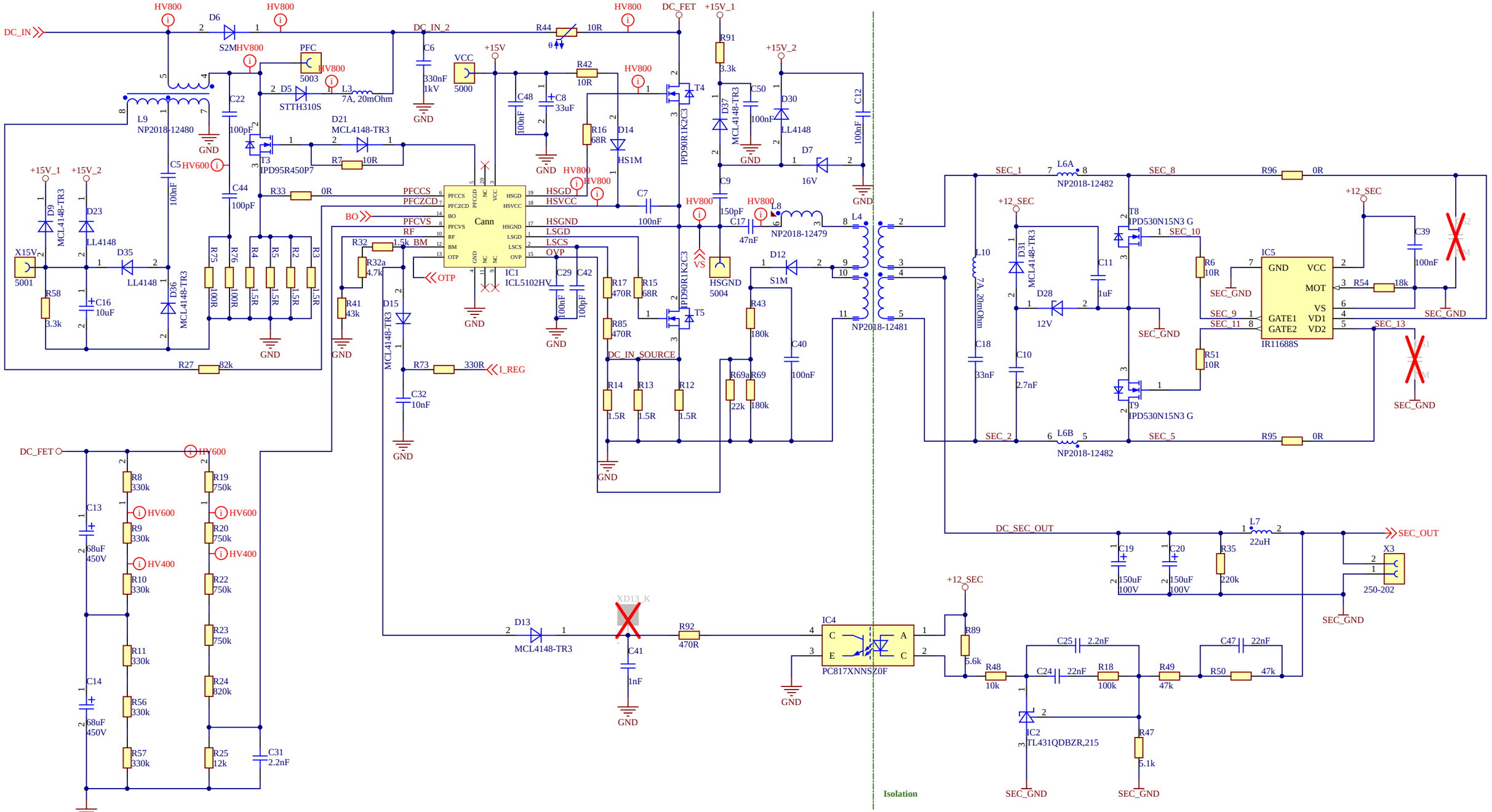

Jumpers And Test Points

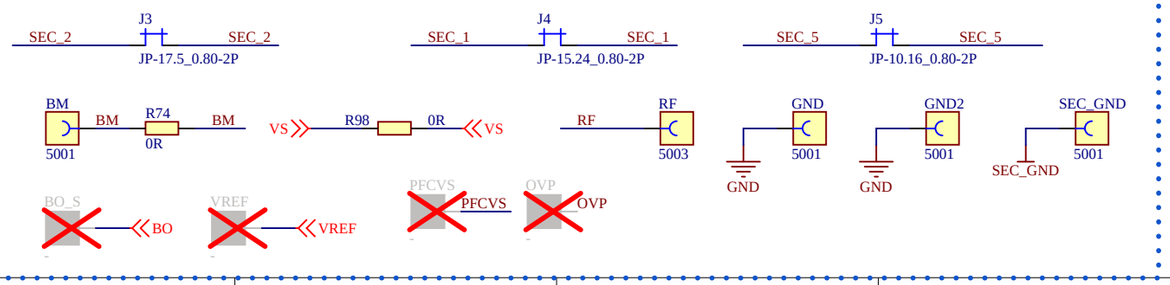

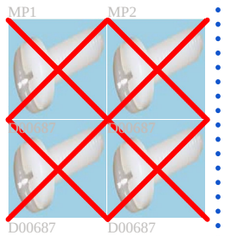

Over Temperature Protection

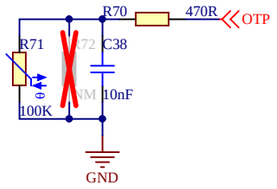

Infineon Technologies AG
PMM ACDC AE RDE
Am Campeon 1-12 - 85579 Neubiberg - Germany

Title	480VAC Professional Streetlight LCC LED Driver		
Variant	Default_Assembly	Approved	*
Size: A3	Document Name: LED_DRIVER_MAIN_PAGE.SchDoc	Rel. VA	Rev. V2.1
Author: VA			
Date: 22.08.2019 Time: 14:18:14	SVN Revision: Not in version control		
© Infineon Technologies AG 2014. All Rights Reserved.	Sheet 3 of 3		

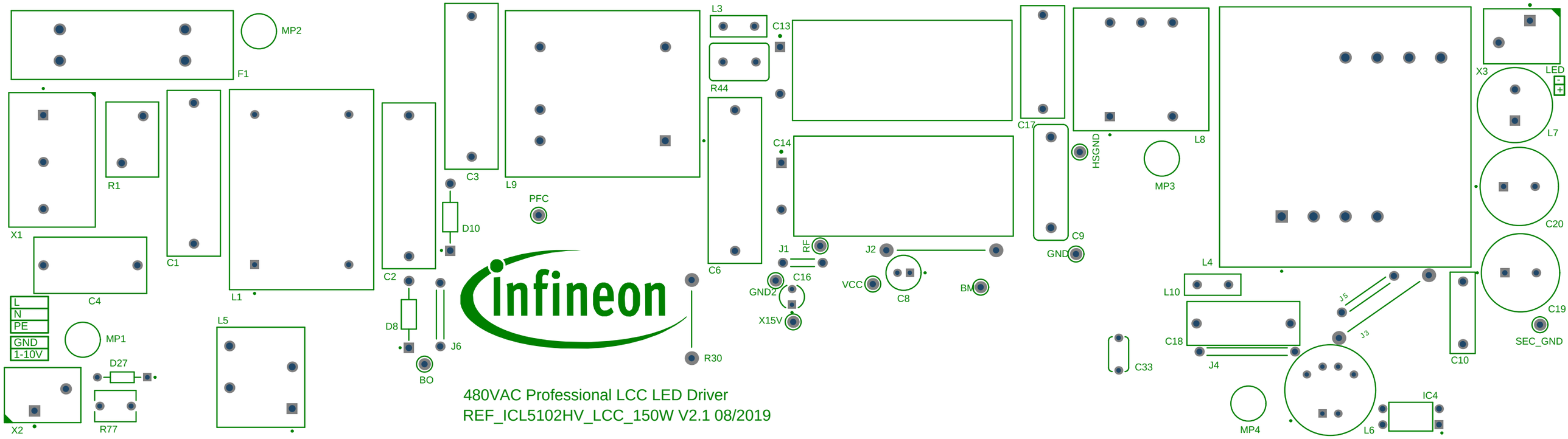
MP2
F1
X1
R1
C1
L1
C4
L
N
PE
GND
1-10V
MP1
X2
D27
R77
L5
C2
C3
L9
L3
R44
C13
C14
C6
D10
PFC
D8
J6
BO
R30
J1
RF
GND2
C16
X15V
J2
VCC
C8
BM
C17
C9
GND
HSGND
L8
MP3
X3
LED
L7
C20
C19
SEC_GND
L4
L10
C18
J4
J5
J3
C33
C10
MP4
L6
IC4
480VAC Professional LCC LED Driver
REF_ICL5102HV_LCC_150W V2.1 08/2019

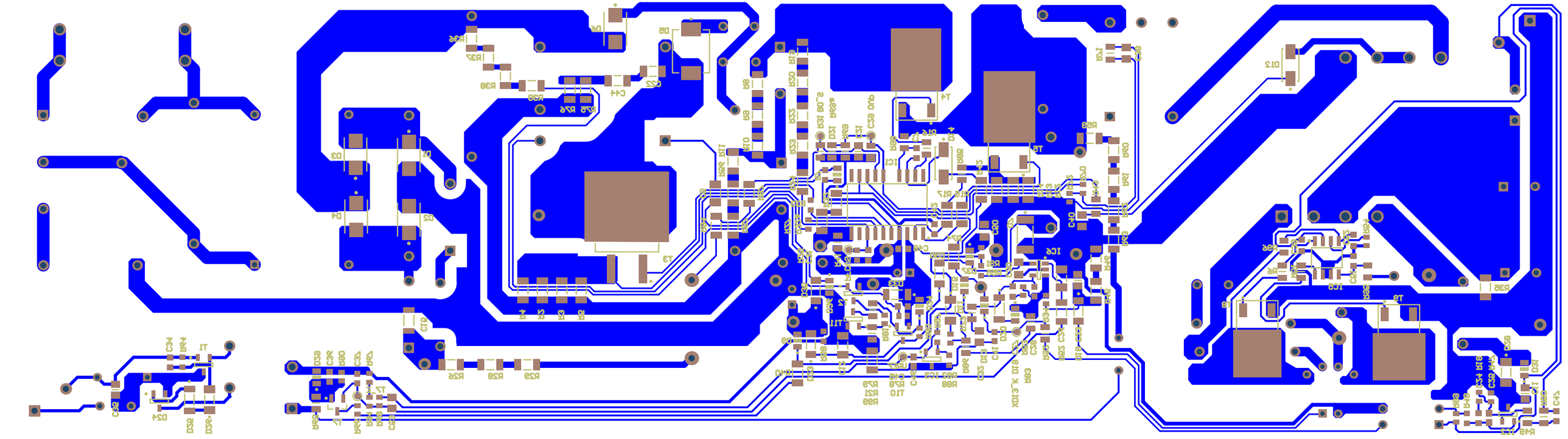

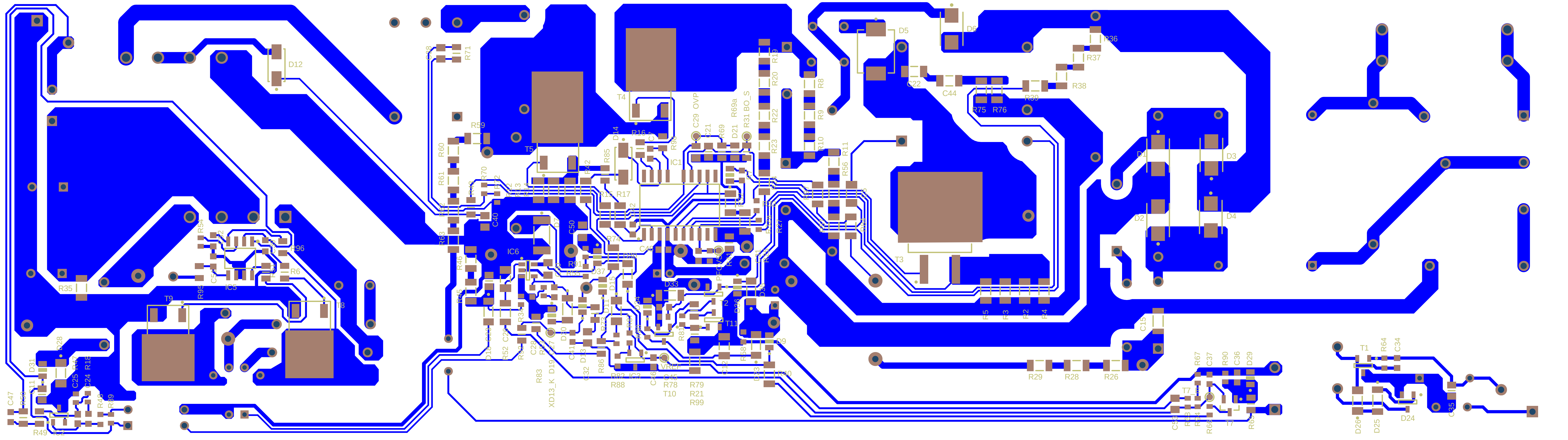
D12
C38
R71
R59
R60
R61
R70
R72
R43
R12
R13
R14
R62
R63
C40
T5
T4
D14
R16
C7
R98
R85
R42
IC1
R15
R17
C42
C29
OVP
C21
R69
R69a
D21
R31
BO_S
R19
R20
R22
R23
R8
R9
R10
R11
R56
R32
R33
R24
R97
C3
R57
R84
R27
D5
D6
C22
C44
R75
R76
R39
R36
R37
R38
D1
D3
D2
D4
T3
R5
R3
R2
R4
C15
R29
R28
R26
R54
C52
C39
R96
C51
R95
IC5
R51
R6
R35
T9
T8
D28
D31
R47
R18
C25
C24
C11
C47
R50
R48
R89
R49
IC2
IC6
R46
R45
R34
C23
C26
D18
R52
R92
C28
R53
C27
R83
D19
XD13_K
C50
D7
R74
C48
D30
R91
R55
D37
D15
D33
PFCVS
R41
C31
R25
D35
D36
T2
T11
D34
D11
R73
R87
R80
R81
D20
C41
D13
C32
R86
R82
R88
IC3
C46
VREF
C45
R78
T10
R79
R21
R99
C12
R58
D9
D23
R40
R67
C37
R90
C36
D29
T7_E
T7
C53
R68
R94
R66
R65
T1
R64
C34
D26
D25
D24
C35